EURO MIX NK
MŰSZAKI, KERESKEDELMI Kft.
Saválló és szénacél ipari szerelvények karima, csõ, fitting

cím: 2400 Dunaújváros, Papírgyári út 49.
telefon: +36 (25) 501-530
fax: +36 (25) 501-531
mobil: +36 (30) 311-3461
email: euromix@invitel.hu

cím: 1103 Budapest, Noszlopy u. 12.
telefon: +36 (1) 260-6172
mobil: +36 (30) 497-6940
mobil: +36 (30) 727-0774
email: budapest@euromix.hu

Saválló menetes tömlőcsatlakozó hegtoldattal NK 1034

Bw Hose Nipple

FEATURES

- The thread ends conform to
  ASME B1.20.1(NPT)
  DIN 2999 & BS21
  ISO 228/1 & ISO 7/1
- Dimension conform to
  ISO 4144, SP114
  EN-10241, JIS
- 150 LBS
- Material conform to
  ASTM A351-CF8M/1.4408
  ASTM A351-CF8/1.4401
  ASTM A216-WCB
  AISI 304. 304L, 316, 316L, 301, 430 ECT
- MADE FROM CASTING, WELD PIPE OR SEAMLESS PIPE

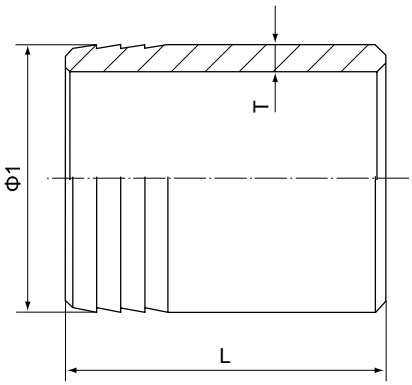

Standard	SIZE	1/8	1/4	3/8	1/2	3/4	1	1 1/4	1 1/2	2	2 1/2	3	4
SCH-40	Φ1	9	13	16	20	25.5	32.4	41	47	59	71.5	87.4	112.8
	T	2	2.5	2.31	2.77	2.87	3.38	3.56	3.68	3.91	5.16	5.49	6.02
	L(mm)	36	38	43	48	55	62	62	66	70	75	80	83
	L(in)	1"	1"	1"	1"	1"	1"	1"	1"	1"	1"	1"	1"
		1 1/4"	1 1/4"	1 1/4"	1 1/4"	1 1/4"	1 1/4"	1 1/4"	1 1/4"	1 1/4"	1 1/4"	1 1/4"	1 1/4"
		1 1/2"	1 1/2"	1 1/2"	1 1/2"	1 1/2"	1 1/2"	1 1/2"	1 1/2"	1 1/2"	1 1/2"	1 1/2"	1 1/2"
		2"	2"	2"	2"	2"	2"	2"	2"	2"	2"	2"	2"
		2 1/2"	2 1/2"	2 1/2"	2 1/2"	2 1/2"	2 1/2"	2 1/2"	2 1/2"	2 1/2"	2 1/2"	2 1/2"	2 1/2"
		3"	3"	3"	3"	3"	3"	3"	3"	3"	3"	3"	3"
		4"	4"	4"	4"	4"	4"	4"	4"	4"	4"	4"	4"
		5"	5"	5"	5"	5"	5"	5"	5"	5"	5"	5"	5"
		6"	6"	6"	6"	6"	6"	6"	6"	6"	6"	6"	6"
		8"	8"	8"	8"	8"	8"	8"	8"	8"	8"	8"	8"

Standard	SIZE	1/8	1/4	3/8	1/2	3/4	1	1 1/4	1 1/2	2	2 1/2	3	4
SCH-80	Φ1	9	13	16	20	25.5	32.4	41	47	59	71.5	87.4	112.8
	T	2.41	3.02	3.2	3.73	3.91	4.55	4.85	5.08	5.54	7.01	7.62	8.56
	L(mm)	36	38	43	48	55	62	62	66	70	75	80	83
	L(in)	1"	1"	1"	1"	1"	1"	1"	1"	1"	1"	1"	1"
		1 1/4"	1 1/4"	1 1/4"	1 1/4"	1 1/4"	1 1/4"	1 1/4"	1 1/4"	1 1/4"	1 1/4"	1 1/4"	1 1/4"
		1 1/2"	1 1/2"	1 1/2"	1 1/2"	1 1/2"	1 1/2"	1 1/2"	1 1/2"	1 1/2"	1 1/2"	1 1/2"	1 1/2"
		2"	2"	2"	2"	2"	2"	2"	2"	2"	2"	2"	2"
		2 1/2"	2 1/2"	2 1/2"	2 1/2"	2 1/2"	2 1/2"	2 1/2"	2 1/2"	2 1/2"	2 1/2"	2 1/2"	2 1/2"
		3"	3"	3"	3"	3"	3"	3"	3"	3"	3"	3"	3"
		4"	4"	4"	4"	4"	4"	4"	4"	4"	4"	4"	4"
		5"	5"	5"	5"	5"	5"	5"	5"	5"	5"	5"	5"
		6"	6"	6"	6"	6"	6"	6"	6"	6"	6"	6"	6"
		8"	8"	8"	8"	8"	8"	8"	8"	8"	8"	8"	8"